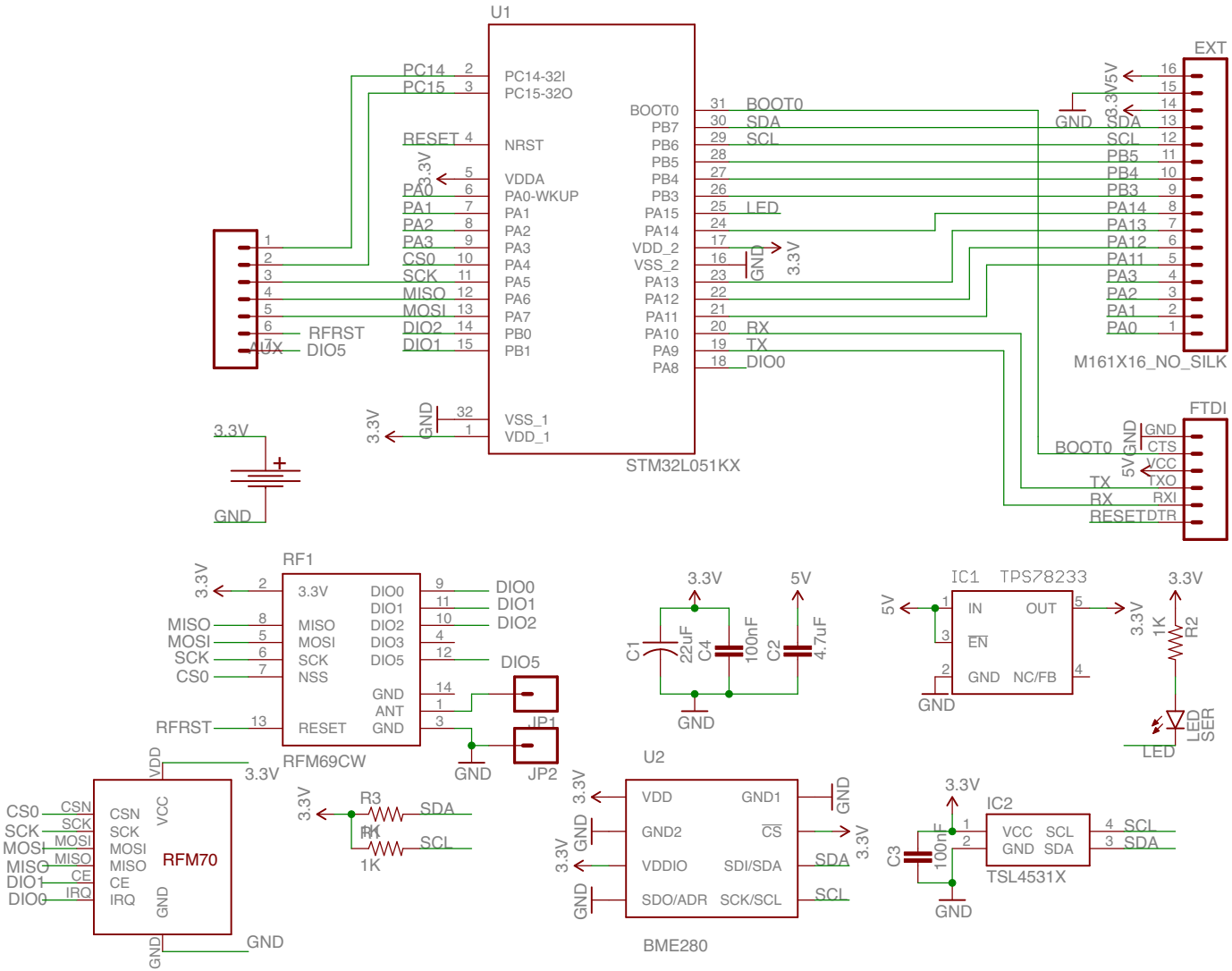
U1
STM32L051KX
PC14-32I
PC15-32O
NRST
VDDA
PA0-WKUP
PA1
PA2
PA3
PA4
PA5
PA6
PA7
PB0
PB1
VSS_1
VDD_1
BOOT0
PB7
PB6
PB5
PB4
PB3
PA15
PA14
VDD_2
VSS_2
PA13
PA12
PA11
PA10
PA9
PA8
PC14
PC15
RESET
PA0
PA1
PA2
PA3
CS0
SCK
MISO
MOSI
DIO2
DIO1
RFRST
DIO5
AUX
BOOT0
SDA
SCL
LED
RX
TX
DIO0
3.3V
GND
EXT
M161X16_NO_SILK
FTDI
CTS
VCC
TXO
RXI
DTR
RESET
RF1
RFM69CW
3.3V
MISO
MOSI
SCK
CS0
RFRST
DIO0
DIO1
DIO2
DIO3
DIO5
NSS
ANT
JP1
JP2
RFM70
CSN
VCC
IRQ
CE
DIO1
DIO0
R3
1K
U2
BME280
VDD
GND1
GND2
CS
VDDIO
SDI/SDA
SDO/ADR
SCK/SCL
C1
22uF
C4
100nF
C2
4.7uF
5V
IC1
TPS78233
IN
OUT
EN
NC/FB
R2
LED
SER
IC2
TSL4531X
VCC
C3
100nF